used for: D-SUB COMBINATION CRIMP

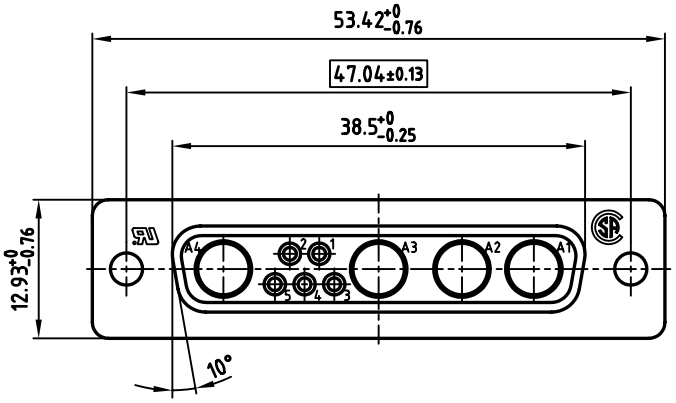

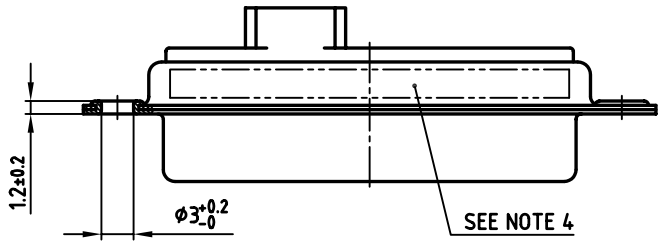

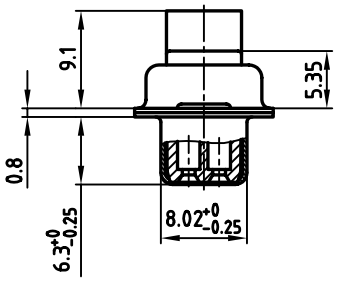

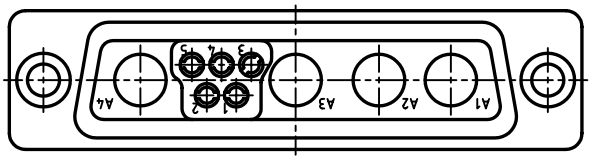

NOTES:

1. METALSHELLS: STEEL: TIN PLATED
2. INSULATORS: PBT GF UL 94 V-0; BLACK
3. [ ] = CRITICAL DIMENSION: SPC
4. CONNECTOR IS PART MARKED: PART NO: CONEC Y/WW

Directive 2002/95/EC „RoHS" Compliant

THIS DRAWING MAY NOT BE COPIED OR REPRODUCED IN ANY WAY, AND MAY NOT BE PASSED ON TO A THIRD PARTY WITHOUT WRITTEN PERMISSION. OWNERSHIP AND COPYRIGHT OF CONEC GmbH

DO NOT ALTER CAD DRAWING BY HAND

rev.	description	date	name

tolerance

1998	date	name
drawn	25.11.	Barcinski
appd.	25.11.	Mickenbecker
norm		
d-old		

CONEC®

scale: 2:1

material: SEE NOTES

title:

D-SUB COMBINATION FEMALE

CRIMP STYLE 9W4S

dwg no: 13K1IL0A

AutoCAD/REL.13 DIN-A 3 sh: 1/1

part no: 3009W4SXK99A10X